CUSTOMER : .

DATE : .

REV : .

SPECIFICATIONS FOR APPROVAL

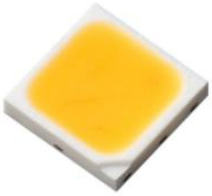

3030N Series 1in1

MODEL NAME : LEMWS36U80 Series

RoHS Compliant

Halogen Free

LG Innotek

CONTENTS

1. Features ---------- 3

2. Applications ---------- 3

3. Outline Dimensions ---------- 3

4. Absolute Maximum Ratings ---------- 4

5. Electro-Optical Characteristics ---------- 4 ~ 6

6. Flux Characteristics and Order Code ---------- 7 ~ 8

7. Chromaticity Bins ---------- 9 ~ 12

8. Typical Characteristic Curves ---------- 13 ~ 17

9. Reliability Test Items and Conditions ---------- 18

10. Packing and Labeling of Products ---------- 19 ~ 21

11. Cautions on Use ---------- 22 ~ 25

Appendix ---------- 26

1. Features

- Lighting Color : White
- Lead Frame Type LED Package : 3.0×3.0×0.65 (L×W×H) [Unit : mm]
- Viewing Angle : 120º
- Chip Material : InGaN
- Soldering Methods : Reflow soldering
- Taping : 8 mm antistatic clear carrier tape and antistatic clear cover tape.
  4,000 pcs/reel, ø178 mm reel

2. Application

- Interior and Exterior Illumination

3. Outline Dimensions

(Unit : mm)

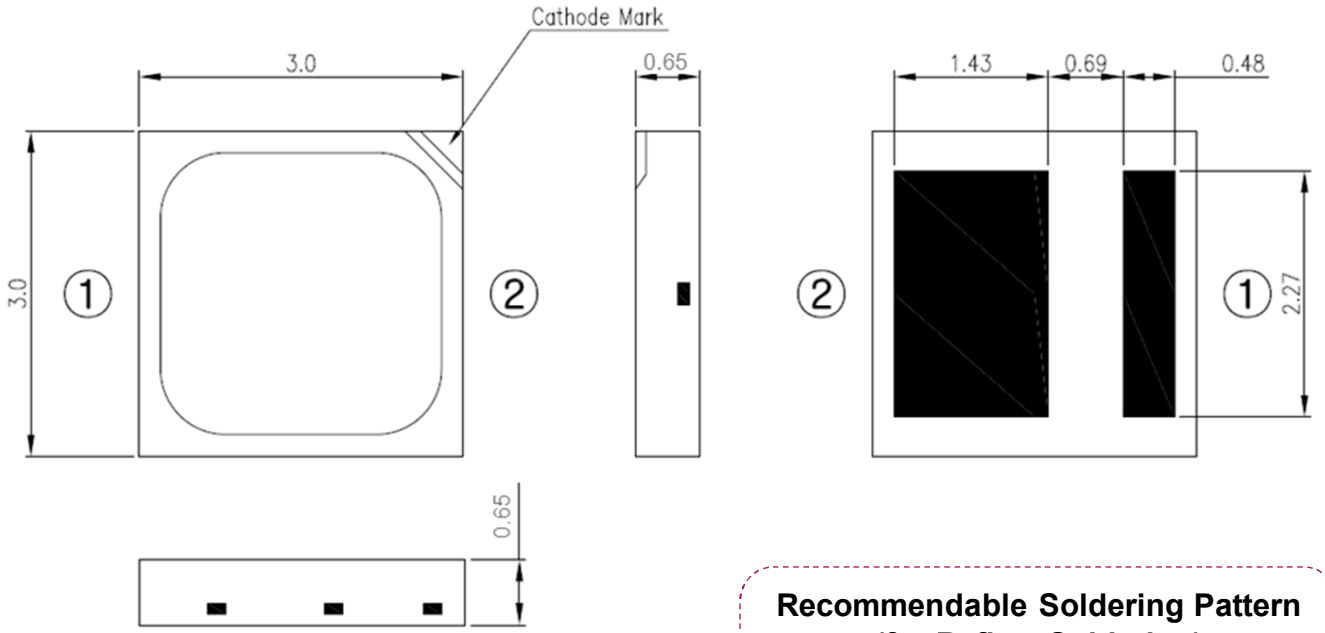

< Internal Circuit >

Pad Configuration

① Anode Pad
② Cathode Pad

Recommendable Soldering Pattern (for Reflow Soldering)

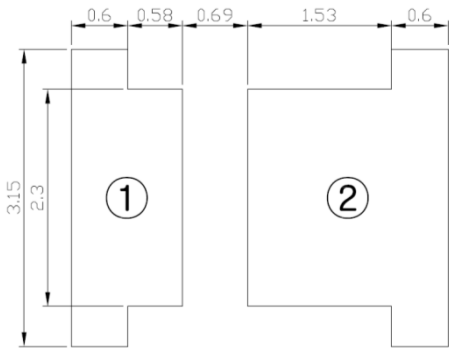

• Tolerances unless otherwise mentioned are ±0.1 mm

LG Innotek

4. Absolute Maximum Ratings

(Ta=25℃)

Item	Symbol	Rating	Unit
Forward Current	If	200	mA
Pulse Forward Current*1)	Ifp	400	mA
Operating Temperature	Topr	-40 ~ +85	℃
Storage Temperature	Tstg	-40 ~ +100	℃
Junction Temperature	Tj	125	℃
Soldering Temperature	JEDEC-J-STD-020		
ESD Classification	Class 2 (ANSI/ESDA/JEDEC JS-001)		

*1) Pulse width ≤10ms and duty cycle ≤10%

※ These values are provided for informational purposes only, not any warranty or guarantee. Regarding any kinds of warranty or guarantee, consult your sales representative.

※ Operating the LED beyond the listed maximum ratings may affect device reliability and cause permanent damage. These or any other conditions beyond those indicated under recommended operating conditions are not implied. The exposure to the absolute maximum rated conditions may affect device reliability.

※ The LEDs are not designed to be driven in reverse bias.

※ These values are provided less than Tj 125℃

5. Electro - Optical Characteristics

(Ta=25℃)

Item	Symbol	CCT	Min.	Typ.	Max.	Unit
Luminous Flux 1) (Component Level)	Φv	6500 (F)	30.0	-	38.0	lm
		5700 (G)	32.0	-	38.0	
		5000 (H)	32.0	-	38.0	
		4000 (J)	32.0	-	38.0	
		3500 (K)	30.0	-	36.0	
		3000 (L)	30.0	-	36.0	
		2700 (M)	28.0	-	34.0	
Luminous Flux 2) (Assembly Level)	Φv	6500 (F)	28.6	-	36.2	lm
		5700 (G)	30.5	-	36.2	
		5000 (H)	30.5	-	36.2	
		4000 (J)	30.5	-	36.2	
		3500 (K)	28.6	-	34.3	
		3000 (L)	28.6	-	34.3	
		2700 (M)	26.7	-	32.4	
Forward Voltage	Vf	All	2.75	-	2.95	V
Color Coordinate	Cx / Cy	All	Refer to '6. Bin Structures			-
Viewing Angle	2Θ1/2	All	-	120	-	deg
Color Rendering Index (CRI)	Ra	All	80	-	-	-
Thermal Resistance, Junction to Solder Point	Rth j-s	All	-	13	-	℃/W
Typical Temperature Coefficient of Forward Voltage*1)	ΔVf / ΔTj	If = 150mA	-2.0	-	-6.0	mV/℃

*1) These values are measured by a standard of LED Component Level, Pulse width ≤ 10ms

*2) These values are measured by a standard of Assembly Level, Pulse width ≤ 10ms

※ These values are measured by the LG Innotek optical spectrum analyzer within the following tolerances. Luminous Flux (Φv) : ±7%, Forward Voltage (Vf) : ±0.1V, Color Value : ±0.005, CRI Value : ±2,

※ Although all LEDs are tested by LG Innotek equipment, some values may vary slightly depending on the conditions of the test equipment.

5. Electro - Optical Characteristics(component level)

(Ta=25℃)

CCT	If (mA)	Vf (V)	Power (W)	Φv (lm)	lm/W
6500K (F)	30	2.73	0.08	17.2	210.3
	60	2.83	0.17	32.4	190.6
	65(Typ.)	2.85	0.19	34.9	188.2
	100	2.97	0.30	51.6	174.0
	150	3.12	0.47	74.0	158.1
	200	3.26	0.65	94.6	145.1
5700K (G)	30	2.73	0.08	17.6	214.7
	60	2.83	0.17	33.1	194.6
	65(Typ.)	2.85	0.19	35.6	192.2
	100	2.97	0.30	52.7	177.7
	150	3.12	0.47	75.6	161.5
	200	3.26	0.65	132.9	127.2
5000K (H)	30	2.73	0.08	17.6	214.7
	60	2.83	0.17	33.1	194.6
	65(Typ.)	2.85	0.19	35.6	192.2
	100	2.97	0.30	52.7	177.7
	150	3.12	0.47	75.6	161.5
	200	3.26	0.65	132.9	127.2
4000K (J)	30	2.73	0.08	17.2	210.9
	60	2.83	0.17	32.5	191.1
	65(Typ.)	2.85	0.19	35.0	188.7
	100	2.97	0.30	51.8	174.5
	150	3.12	0.47	74.3	158.6
	200	3.26	0.65	94.9	145.6
3500K (K)	30	2.73	0.08	16.6	203.3
	60	2.83	0.17	31.3	184.2
	65(Typ.)	2.85	0.19	33.7	181.9
	100	2.97	0.30	49.9	168.2
	150	3.12	0.47	71.6	152.8
	200	3.26	0.65	91.4	140.3
3000K (L)	30	2.73	0.08	16.6	203.3
	60	2.83	0.17	31.3	184.2
	65(Typ.)	2.85	0.19	33.7	181.9
	100	2.97	0.30	49.9	168.2
	150	3.12	0.47	71.6	152.8
	200	3.26	0.65	91.4	140.3
2700K (M)	30	2.73	0.08	16.6	203.3
	60	2.83	0.17	31.3	184.2
	65(Typ.)	2.85	0.19	33.7	181.9
	100	2.97	0.30	49.9	168.2
	150	3.12	0.47	71.6	152.8
	200	3.26	0.65	91.4	140.3

※ Φv values are for representative references only.

5. Electro - Optical Characteristics(assembly level)

(Ta=25℃)

CCT	If (mA)	Vf (V)	Power (W)	Φv (lm)	lm/W
6500K (F)	30	2.73	0.08	16.4	200.2
	60	2.83	0.17	30.9	181.5
	65(Typ.)	2.85	0.19	33.2	179.2
	100	2.97	0.30	49.2	165.7
	150	3.12	0.47	70.5	150.6
	200	3.26	0.65	90.1	138.2
5700K (G)	30	2.73	0.08	16.7	204.5
	60	2.83	0.17	31.5	185.3
	65(Typ.)	2.85	0.19	33.9	183.0
	100	2.97	0.30	50.2	169.2
	150	3.12	0.47	72.0	153.8
	200	3.26	0.65	126.5	121.1
5000K (H)	30	2.73	0.08	16.7	204.5
	60	2.83	0.17	31.5	185.3
	65(Typ.)	2.85	0.19	33.9	183.0
	100	2.97	0.30	50.2	169.2
	150	3.12	0.47	72.0	153.8
	200	3.26	0.65	126.5	121.1
4000K (J)	30	2.73	0.08	16.4	200.8
	60	2.83	0.17	31.0	182.0
	65(Typ.)	2.85	0.19	33.3	179.8
	100	2.97	0.30	49.3	166.2
	150	3.12	0.47	70.7	151.0
	200	3.26	0.65	90.3	138.6
3500K (K)	30	2.73	0.08	15.8	193.6
	60	2.83	0.17	29.8	175.5
	65(Typ.)	2.85	0.19	32.1	173.3
	100	2.97	0.30	47.5	160.2
	150	3.12	0.47	68.2	145.6
	200	3.26	0.65	87.1	133.6
3000K (L)	30	2.73	0.08	15.8	193.6
	60	2.83	0.17	29.8	175.5
	65(Typ.)	2.85	0.19	32.1	173.3
	100	2.97	0.30	47.5	160.2
	150	3.12	0.47	68.2	145.6
	200	3.26	0.65	87.1	133.6
2700K (M)	30	2.73	0.08	15.8	193.6
	60	2.83	0.17	29.8	175.5
	65(Typ.)	2.85	0.19	32.1	173.3
	100	2.97	0.30	47.5	160.2
	150	3.12	0.47	68.2	145.6
	200	3.26	0.65	87.1	133.6

※ Φv values are for representative references only.

※ Flux is binned by assembly level

6. Flux Characteristics and Order Code(component level)

(Ta=25℃)

Color	CRI	CCT	Vf @ 150mA [V]	Luminous Flux [lm] @ 150mA			Order Code
				Bin Code	Min.	Max.	
Cool	80	6500 (F)	2.75 ~ 2.80 (8B) 2.80 ~ 2.85 (9A) 2.85 ~ 2.90 (9B) 2.90 ~ 2.95 (0A)	R1	30.0	32.0	LEMWS36X80FZ2Fxx
				R2	32.0	34.0	
				R3	34.0	36.0	
				R4	36.0	38.0	
Cool	80	5700 (G)	2.75 ~ 2.80 (8B) 2.80 ~ 2.85 (9A) 2.85 ~ 2.90 (9B) 2.90 ~ 2.95 (0A)	R2	32.0	34.0	LEMWS36X80GZ2Fxx
				R3	34.0	36.0	
				R4	36.0	38.0	
Cool	80	5000 (H)	2.75 ~ 2.80 (8B) 2.80 ~ 2.85 (9A) 2.85 ~ 2.90 (9B) 2.90 ~ 2.95 (0A)	R2	32.0	34.0	LEMWS36X80HZ2Fxx
				R3	34.0	36.0	
				R4	36.0	38.0	
Neutral	80	4000 (J)	2.75 ~ 2.80 (8B) 2.80 ~ 2.85 (9A) 2.85 ~ 2.90 (9B) 2.90 ~ 2.95 (0A)	R2	32.0	34.0	LEMWS36X80JZ3Fxx
				R3	34.0	36.0	
				R4	36.0	38.0	
Warm	80	3500 (K)	2.75 ~ 2.80 (8B) 2.80 ~ 2.85 (9A) 2.85 ~ 2.90 (9B) 2.90 ~ 2.95 (0A)	R1	30.0	32.0	LEMWS36X80KZ3Fxx
				R2	32.0	34.0	
				R3	34.0	36.0	
Warm	80	3000 (L)	2.75 ~ 2.80 (8B) 2.80 ~ 2.85 (9A) 2.85 ~ 2.90 (9B) 2.90 ~ 2.95 (0A)	R1	30.0	32.0	LEMWS36X80LZ3Fxx
				R2	32.0	34.0	
				R3	34.0	36.0	
Warm	80	2700 (M)	2.75 ~ 2.80 (8B) 2.80 ~ 2.85 (9A) 2.85 ~ 2.90 (9B) 2.90 ~ 2.95 (0A)	R0	28.0	30.0	LEMWS36X80MZ3Fxx
				R1	30.0	32.0	
				R2	32.0	34.0	

※ Φv values are for representative references only.

6. Flux Characteristics and Order Code(assembly level)

(Ta=25℃)

Color	CRI	CCT	Vf @ 150mA [V]	Luminous Flux [lm] @ 150mA			Order Code
				Bin Code	Min.	Max.	
Cool	80	6500 (F)	2.75 ~ 2.80 (8B) 2.80 ~ 2.85 (9A) 2.85 ~ 2.90 (9B) 2.90 ~ 2.95 (0A)	R1	28.6	30.5	LEMWS36X80FZ2Fxx
				R2	30.5	32.4	
				R3	32.4	34.3	
				R4	34.3	36.2	
Cool	80	5700 (G)	2.75 ~ 2.80 (8B) 2.80 ~ 2.85 (9A) 2.85 ~ 2.90 (9B) 2.90 ~ 2.95 (0A)	R2	30.5	32.4	LEMWS36X80GZ2Fxx
				R3	32.4	34.3	
				R4	34.3	36.2	
Cool	80	5000 (H)	2.75 ~ 2.80 (8B) 2.80 ~ 2.85 (9A) 2.85 ~ 2.90 (9B) 2.90 ~ 2.95 (0A)	R2	30.5	32.4	LEMWS36X80HZ2Fxx
				R3	32.4	34.3	
				R4	34.3	36.2	
Neutral	80	4000 (J)	2.75 ~ 2.80 (8B) 2.80 ~ 2.85 (9A) 2.85 ~ 2.90 (9B) 2.90 ~ 2.95 (0A)	R2	30.5	32.4	LEMWS36X80JZ3Fxx
				R3	32.4	34.3	
				R4	34.3	36.2	
Warm	80	3500 (K)	2.75 ~ 2.80 (8B) 2.80 ~ 2.85 (9A) 2.85 ~ 2.90 (9B) 2.90 ~ 2.95 (0A)	R1	28.6	30.5	LEMWS36X80KZ3Fxx
				R2	30.5	32.4	
				R3	32.4	34.3	
Warm	80	3000 (L)	2.75 ~ 2.80 (8B) 2.80 ~ 2.85 (9A) 2.85 ~ 2.90 (9B) 2.90 ~ 2.95 (0A)	R1	28.6	30.5	LEMWS36X80LZ3Fxx
				R2	30.5	32.4	
				R3	32.4	34.3	
Warm	80	2700 (M)	2.75 ~ 2.80 (8B) 2.80 ~ 2.85 (9A) 2.85 ~ 2.90 (9B) 2.90 ~ 2.95 (0A)	R0	26.7	28.6	LEMWS36X80MZ3Fxx
				R1	28.6	30.5	
				R2	30.5	32.4	

※ Φv values are for representative references only.

7. Chromaticity Bins (Cool White)

LG Innotek complies with the ANSI C78.377A standard for its chromaticity bin structure. For each ANSI quadrangle for the CCT range of 5000K to 6500K, LG Innotek provides micro bins.

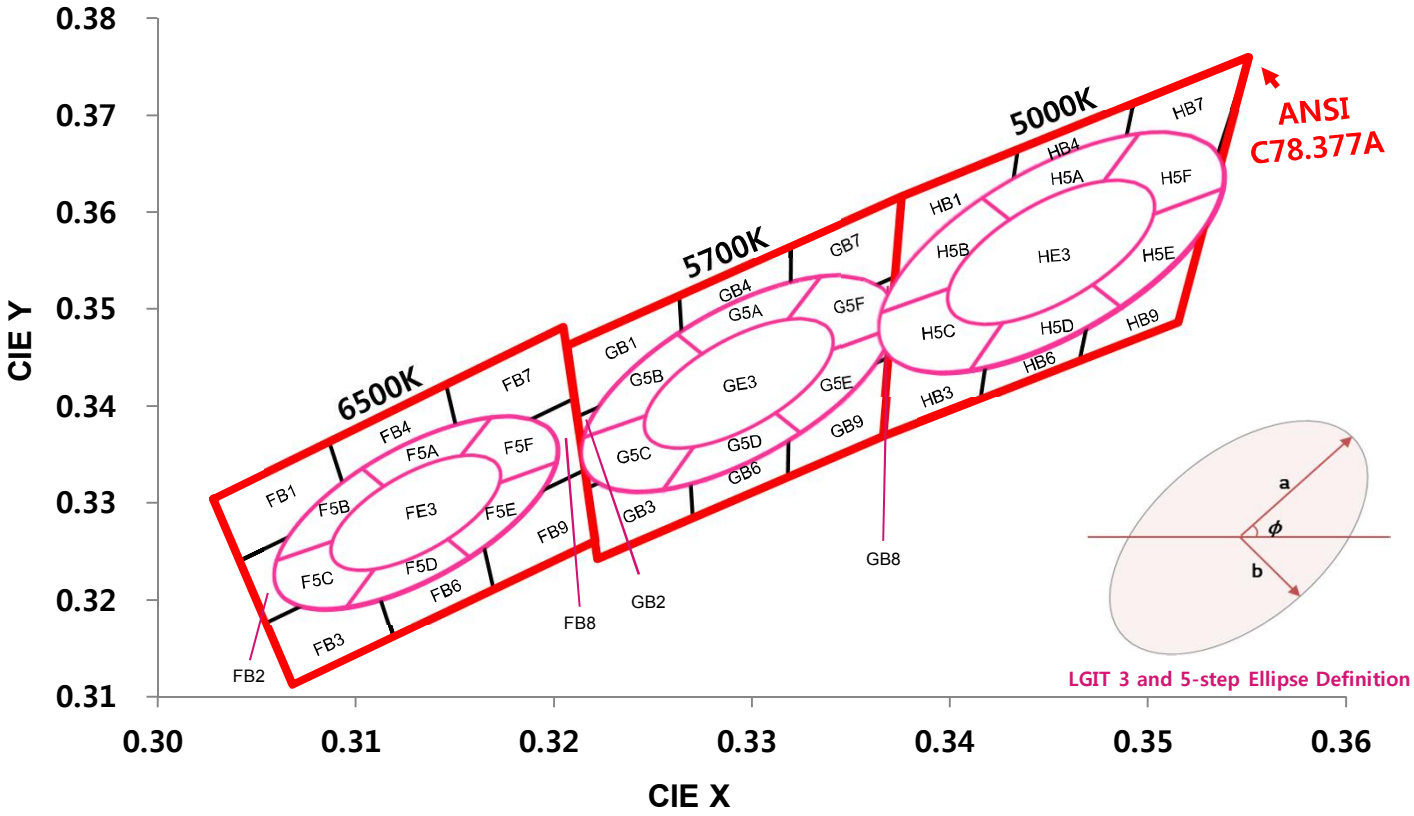

Bin	CIE X	CIE Y	Bin	CIE X	CIE Y	Bin	CIE X	CIE Y
FB1	0.3028	0.3304	GB1	0.3207	0.3462	HB1	0.3376	0.3616
	0.3087	0.3363		0.3263	0.3513		0.3434	0.3664
	0.3098	0.3296		0.3266	0.3437		0.3428	0.3579
	0.3041	0.3240		0.3212	0.3389		0.3373	0.3524
FB2	0.3041	0.3240	GB2	0.3212	0.3389	HB3	0.3369	0.3451
	0.3098	0.3296		0.3266	0.3437		0.3422	0.3494
	0.3108	0.3229		0.3268	0.3361		0.3416	0.3408
	0.3055	0.3177		0.3217	0.3316		0.3366	0.3369
FB3	0.3055	0.3177	GB3	0.3217	0.3316	HB4	0.3434	0.3664
	0.3108	0.3229		0.3268	0.3361		0.3493	0.3712
	0.3119	0.3162		0.3270	0.3285		0.3484	0.3624
	0.3068	0.3113		0.3222	0.3243		0.3428	0.3579
FB4	0.3087	0.3363	GB4	0.3263	0.3513	HB6	0.3422	0.3494
	0.3146	0.3422		0.3320	0.3565		0.3474	0.3536
	0.3154	0.3352		0.3319	0.3485		0.3465	0.3448
	0.3098	0.3296		0.3266	0.3437		0.3416	0.3408

7. Chromaticity Bins (Continued)

Bin	CIE X	CIE Y	Bin	CIE X	CIE Y	Bin	CIE X	CIE Y
FB6	0.3108	0.3229	GB6	0.3268	0.3361	HB7	0.3493	0.3712
	0.3162	0.3282		0.3319	0.3406		0.3551	0.3760
	0.3170	0.3212		0.3318	0.3327		0.3535	0.3659
	0.3119	0.3162		0.3270	0.3285		0.3484	0.3624
FB7	0.3146	0.3422	GB7	0.3320	0.3565	HB9	0.3474	0.3536
	0.3205	0.3481		0.3376	0.3616		0.3527	0.3578
	0.3210	0.3408		0.3373	0.3534		0.3515	0.3487
	0.3154	0.3352		0.3319	0.3485		0.3465	0.3448
FB8	0.3154	0.3352	GB8	0.3319	0.3485	-	-	-
	0.3210	0.3408		0.3373	0.3534		-	-
	0.3216	0.3334		0.3369	0.3451		-	-
	0.3162	0.3282		0.3319	0.3406		-	-
FB9	0.3162	0.3282	GB9	0.3319	0.3406	-	-	-
	0.3216	0.3334		0.3369	0.3451		-	-
	0.3221	0.3261		0.3366	0.3369		-	-
	0.3170	0.3212		0.3318	0.3327		-	-

Nominal CCT (Rank)	Steps	Center Point		Major Axis	Minor Axis	Rotation Angle
		Cx	Cy	a	b	Φ
5000K (HE3)	3	0.3452	0.3558	0.00822	0.00354	59.62
5000K (H5A~H5F)	5			0.01370	0.00590	
5700K (GE3)	3	0.3293	0.3423	0.00746	0.00320	59.09
5700K (G5A~G5F)	5			0.01243	0.00533	
6500K (FE3)	3	0.3131	0.3290	0.00669	0.00285	58.57
6500K (F5A~F5F)	5			0.01115	0.00475	

LG Innotek

7. Chromaticity Bins (Neutral & Warm White)

LG Innotek complies with the ANSI C78.377A standard for its chromaticity bin structure. For each ANSI quadrangle for the CCT range of 2700K to 4000K, LG Innotek provides 16 micro bins.

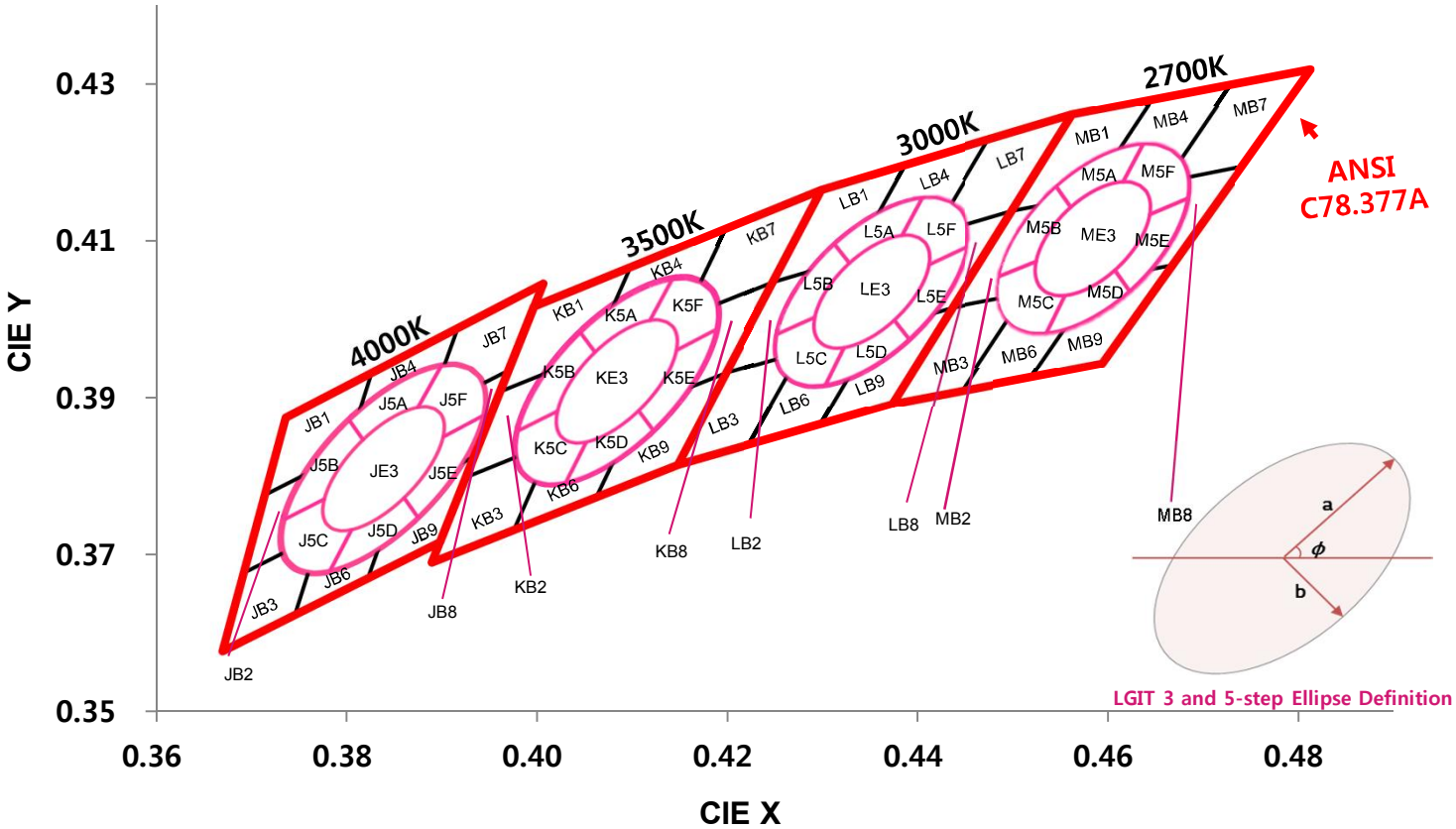

Bin	CIE X	CIE Y	Bin	CIE X	CIE Y	Bin	CIE X	CIE Y	Bin	CIE X	CIE Y
JB1	0.3736	0.3874	KB1	0.3996	0.4015	LB1	0.4299	0.4165	MB1	0.4562	0.4260
	0.3826	0.3931		0.4097	0.4065		0.4387	0.4197		0.4646	0.4280
	0.3799	0.3828		0.4056	0.3954		0.4332	0.4078		0.4579	0.4156
	0.3714	0.3775		0.3960	0.3907		0.4248	0.4048		0.4499	0.4138
JB2	0.3826	0.3931	KB2	0.4097	0.4065	LB2	0.4387	0.4197	MB2	0.4646	0.4280
	0.3916	0.3987		0.4198	0.4115		0.4474	0.4228		0.4729	0.4299
	0.3885	0.3882		0.4152	0.4001		0.4415	0.4108		0.4659	0.4175
	0.3799	0.3828		0.4056	0.3954		0.4332	0.4078		0.4579	0.4156
JB3	0.3916	0.3987	KB3	0.4198	0.4115	LB3	0.4474	0.4228	MB3	0.4729	0.4299
	0.4006	0.4044		0.4299	0.4165		0.4562	0.4260		0.4813	0.4319
	0.3970	0.3935		0.4248	0.4048		0.4499	0.4138		0.4740	0.4194
	0.3885	0.3882		0.4152	0.4001		0.4415	0.4108		0.4659	0.4175
JB4	0.3714	0.3775	KB4	0.3960	0.3907	LB4	0.4248	0.4048	MB4	0.4499	0.4138
	0.3799	0.3828		0.4056	0.3954		0.4332	0.4078		0.4579	0.4156
	0.3773	0.3726		0.4016	0.3843		0.4277	0.3959		0.4513	0.4033
	0.3692	0.3677		0.3925	0.3798		0.4198	0.3931		0.4436	0.4015

7. Chromaticity Bins (Continued)

Bin	CIE X	CIE Y	Bin	CIE X	CIE Y	Bin	CIE X	CIE Y	Bin	CIE X	CIE Y
JB6	0.3885	0.3882	KB6	0.4152	0.4001	LB6	0.4415	0.4108	MB6	0.4659	0.4175
	0.3970	0.3935		0.4248	0.4048		0.4499	0.4138		0.4740	0.4194
	0.3934	0.3825		0.4198	0.3931		0.4436	0.4015		0.4666	0.4069
	0.3853	0.3776		0.4107	0.3887		0.4357	0.3987		0.4590	0.4051
JB7	0.3692	0.3677	KB7	0.3925	0.3798	LB7	0.4198	0.3931	MB7	0.4436	0.4015
	0.3773	0.3726		0.4016	0.3843		0.4277	0.3959		0.4513	0.4033
	0.3746	0.3624		0.3975	0.3731		0.4222	0.3840		0.4446	0.3910
	0.3670	0.3578		0.3889	0.3690		0.4147	0.3814		0.4373	0.3893
JB8	0.3773	0.3726	KB8	0.4016	0.3843	LB8	0.4277	0.3959	MB8	0.4513	0.4033
	0.3853	0.3776		0.4107	0.3887		0.4357	0.3987		0.4590	0.4051
	0.3822	0.3670		0.4061	0.3773		0.4298	0.3867		0.4520	0.3927
	0.3746	0.3624		0.3975	0.3731		0.4222	0.3840		0.4446	0.3910
JB9	0.3853	0.3776	KB9	0.4107	0.3887	LB9	0.4357	0.3987	MB9	0.4590	0.4051
	0.3934	0.3825		0.4198	0.3931		0.4436	0.4015		0.4666	0.4069
	0.3898	0.3716		0.4147	0.3814		0.4373	0.3893		0.4593	0.3944
	0.3822	0.3670		0.4061	0.3773		0.4298	0.3867		0.4520	0.3927

Nominal CCT (Rank)	Steps	Center Point		Major Axis	Minor Axis	Rotation Angle
		Cx	Cy	a	b	Φ
2700K (ME3)	3	0.4585	0.4104	0.00810	0.00420	53.70
2700K (M5A~M5F)	5			0.01350	0.00700	
3000K (LE3)	3	0.4345	0.4033	0.00834	0.00408	53.22
3000K (L5A~L5F)	5			0.01390	0.00680	
3500K (KE3)	3	0.4083	0.3921	0.00927	0.00414	54.00
3500K (K5A~K5F)	5			0.01545	0.00690	
4000K (JE3)	3	0.3828	0.3803	0.00939	0.00402	53.72
4000K (J5A~J5F)	5			0.01565	0.00670	

8. Typical Characteristic Curves

- Forward Current vs. Forward Voltage

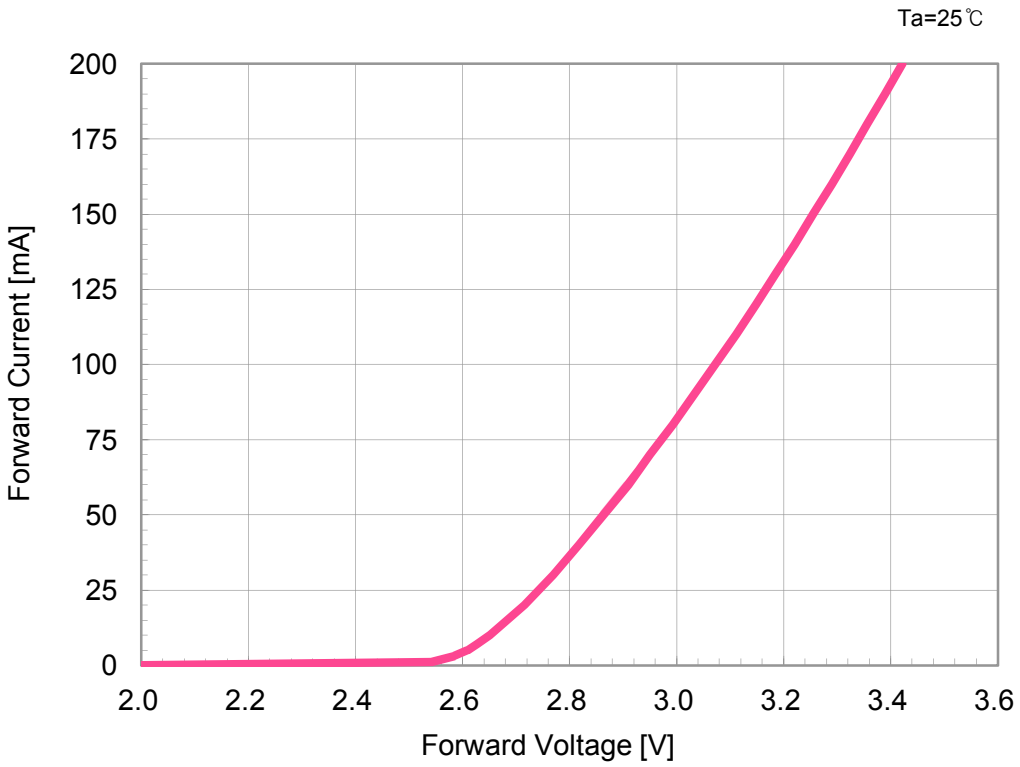

- Relative Luminous Flux vs. Forward Current

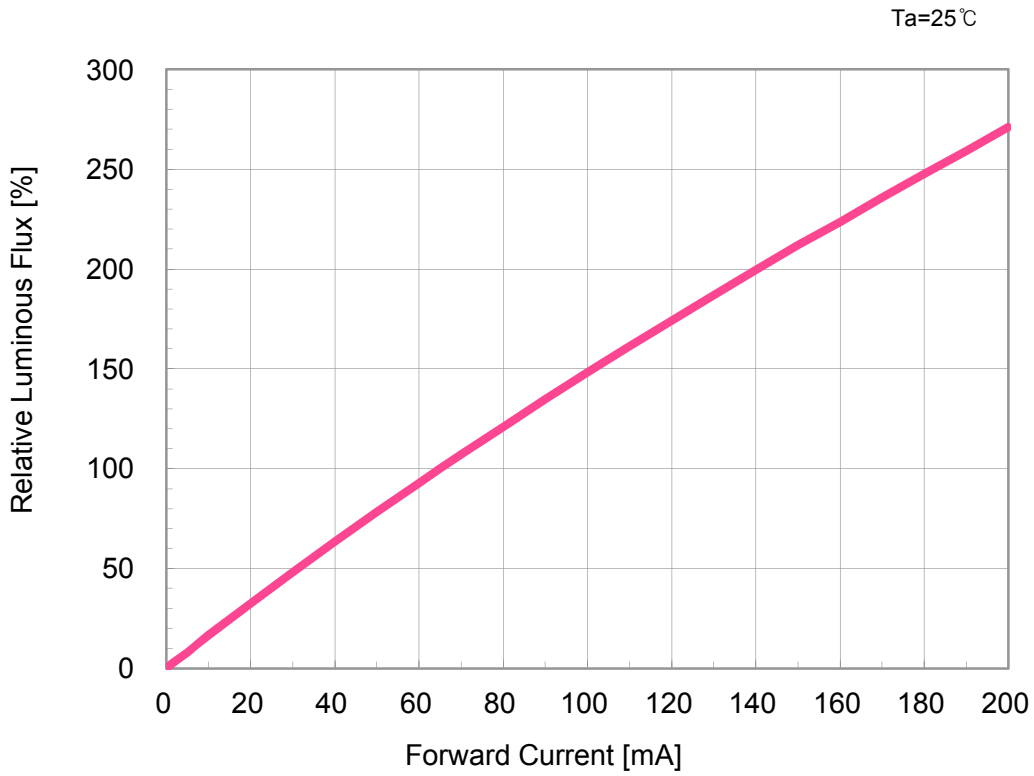

8. Typical Characteristic Curves

- Spectrum

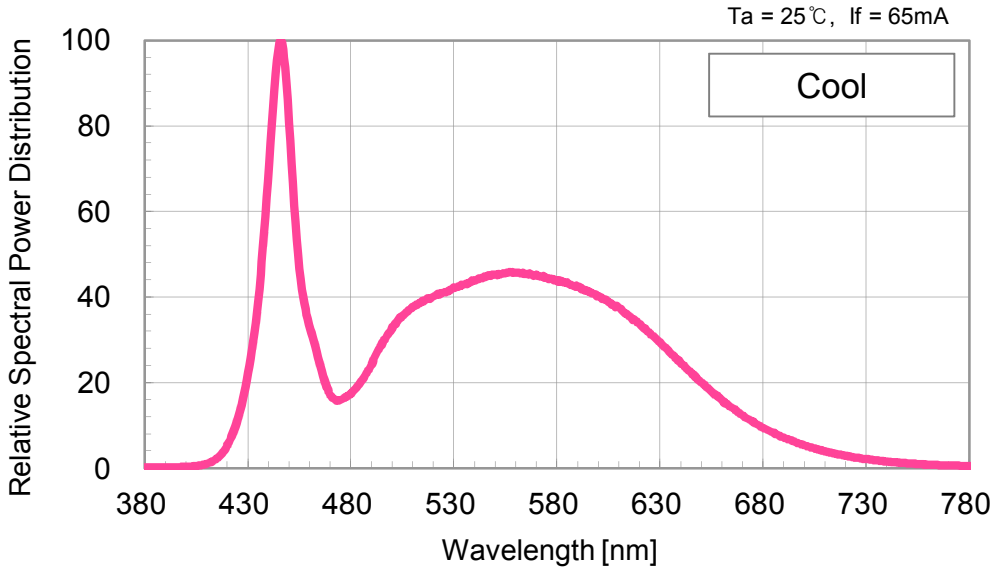

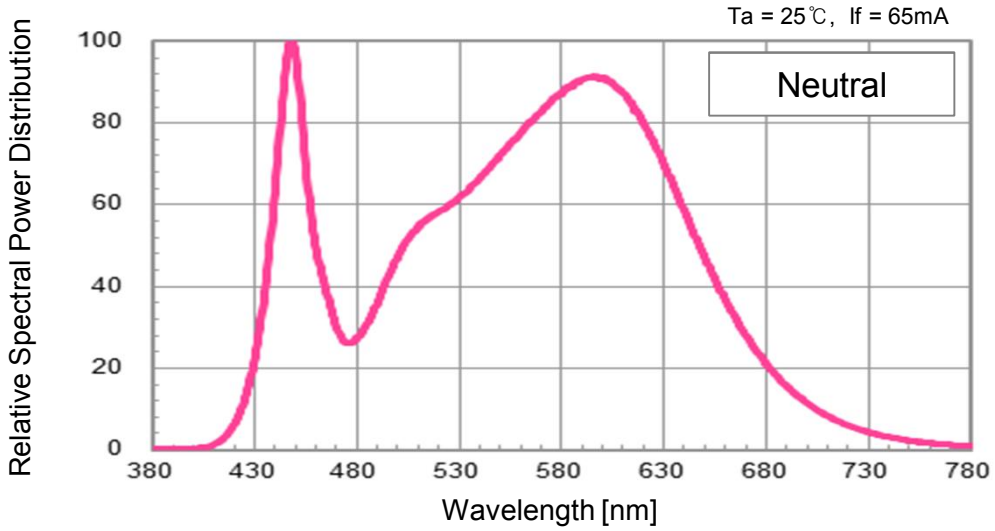

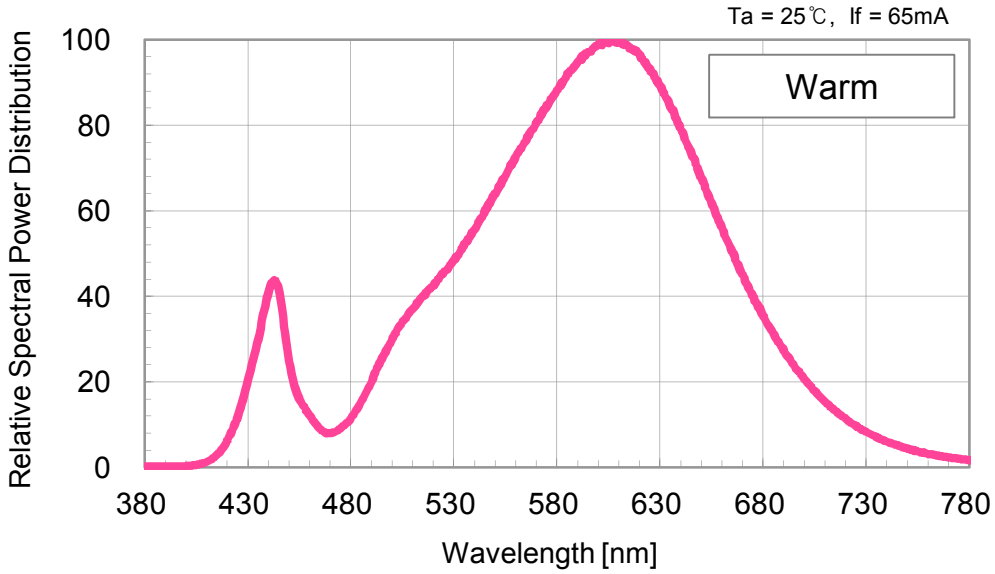

8. Typical Characteristic Curves

▪ Chromaticity Coordinate vs. Forward Current

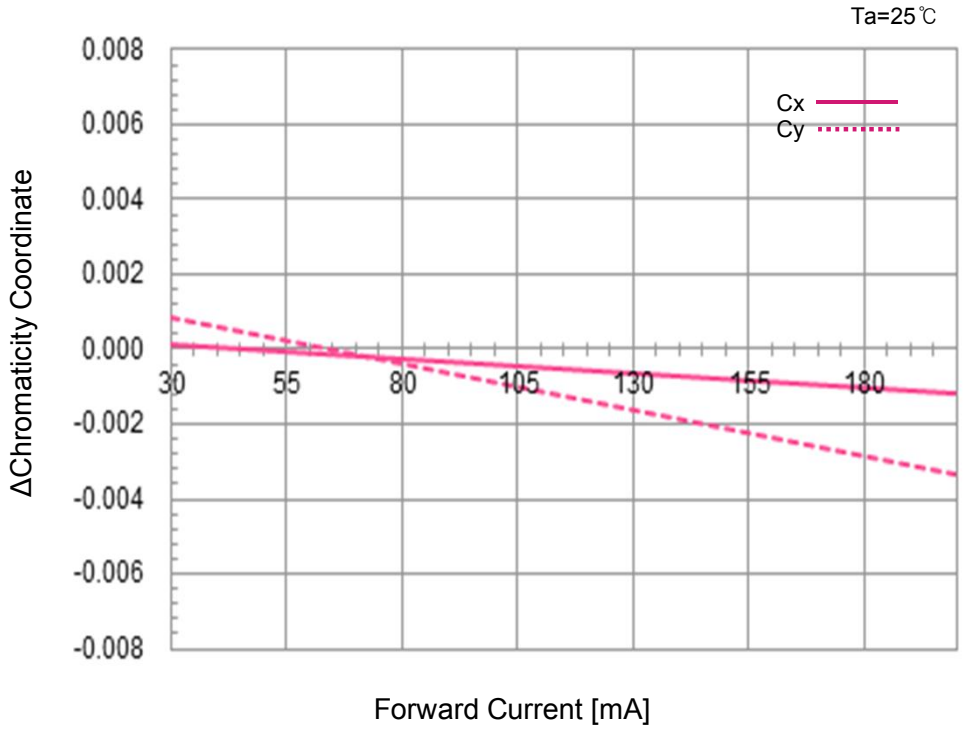

▪ Radiation Characteristics

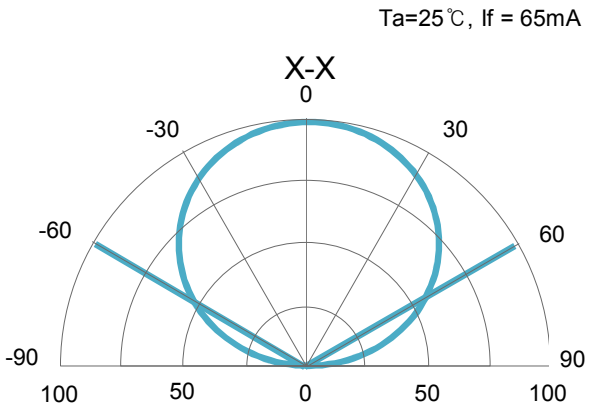

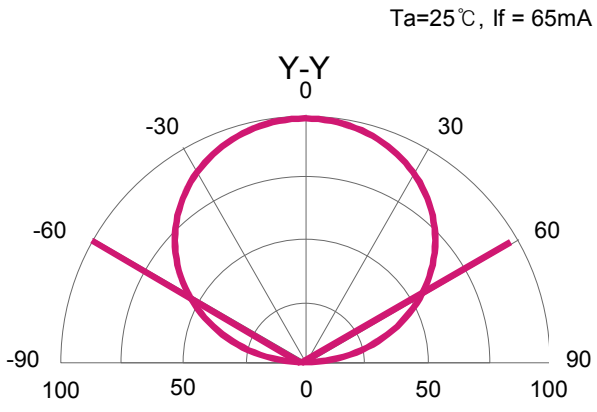

8. Typical Characteristic Curves

▪ Luminous Flux vs. Temperature

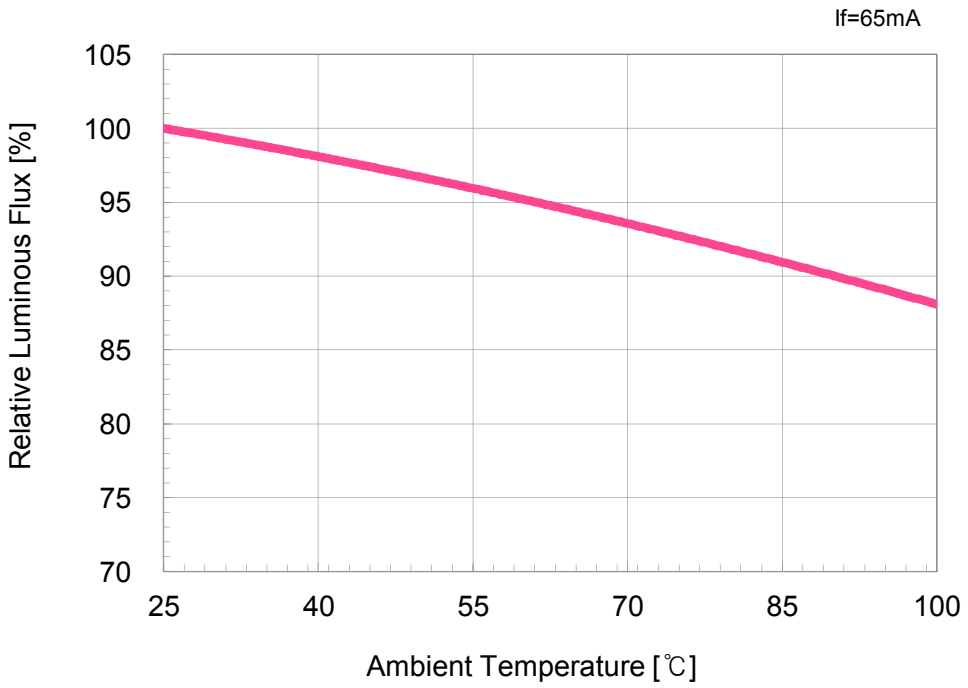

▪ Chromaticity Coordinate vs. Temperature

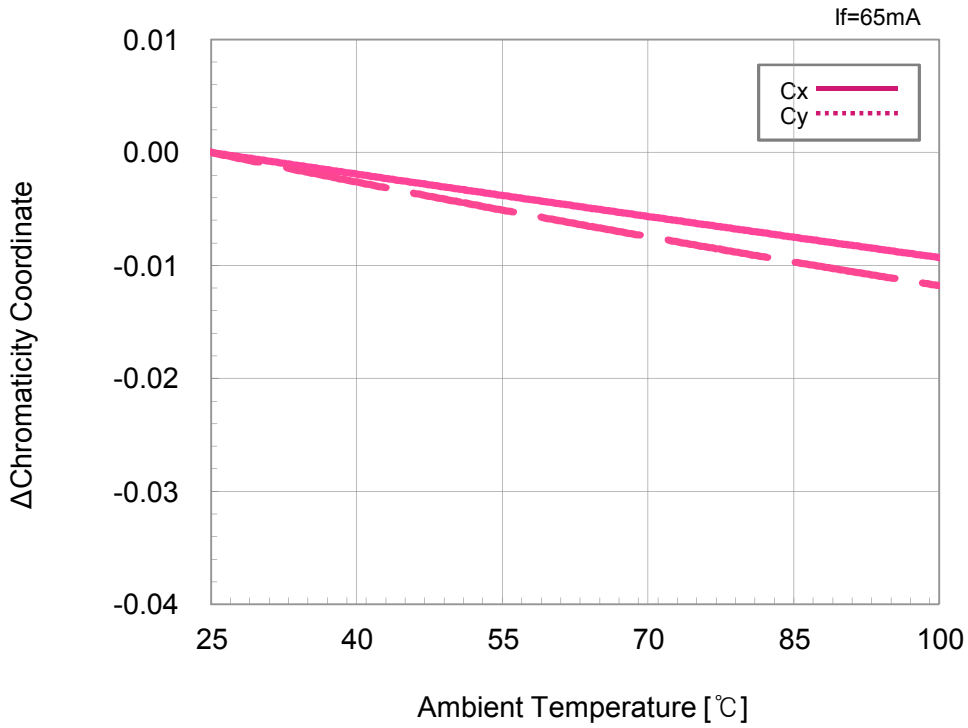

8. Typical Characteristic Curves

▪ Forward Voltage vs. Temperature

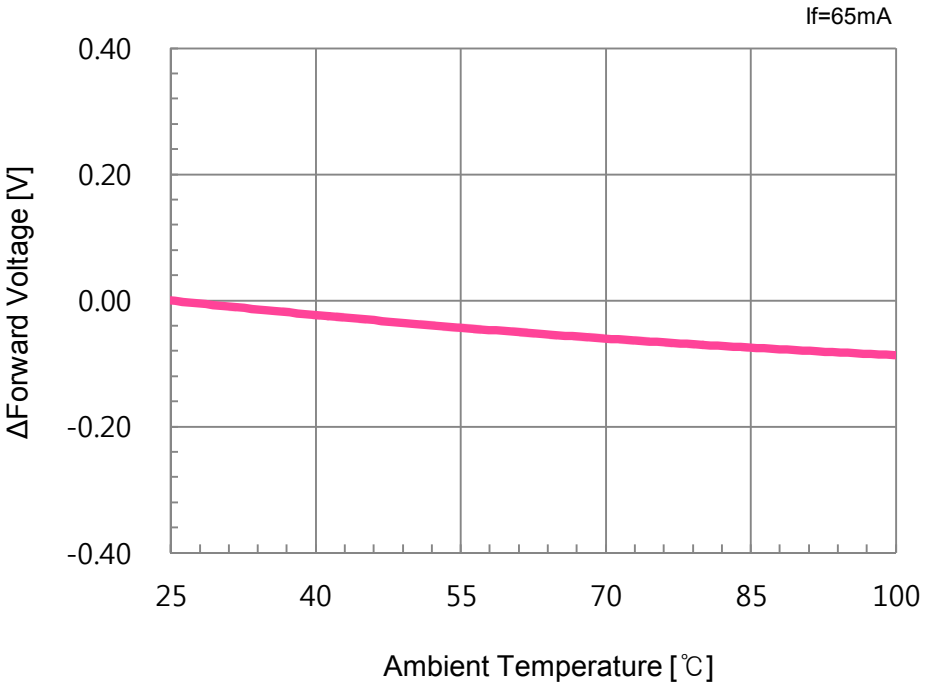

▪ Derating Curve

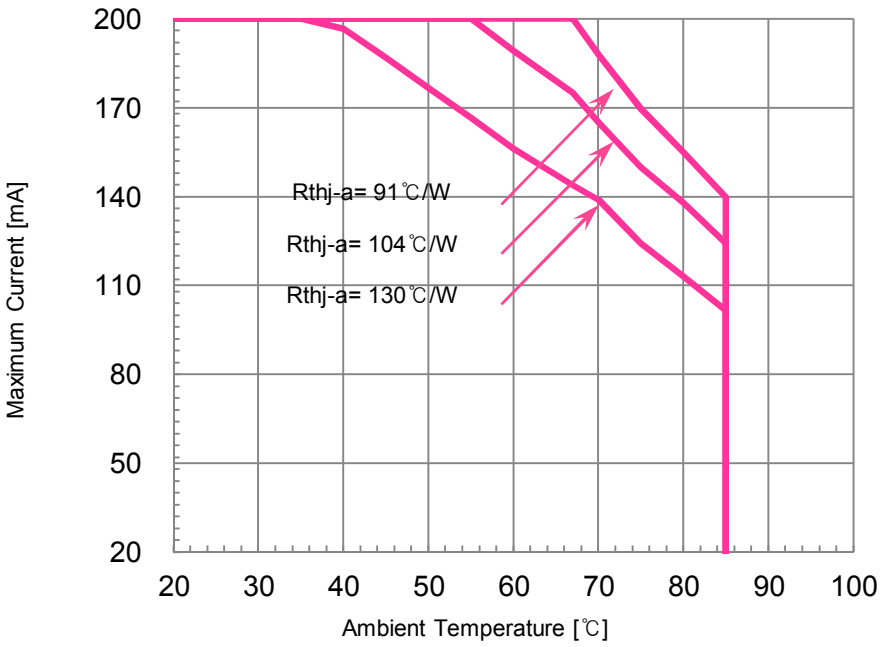

9. Reliability Test Items and Conditions

9-1. Failure Criteria

Items	Symbols	Test Conditions	Criteria	
			Min.	Max.
Forward Voltage	Vf	If = 65mA	-	Initial Value × 1.1
Luminous Flux	Φv	If = 65mA	Initial Value × 0.7	-

9-2. Reliability Tests

No	Items	Test Conditions	Test Hours /Cycles	Sample Size	Ac/Re
1	Room Temperature Operating Life (RTOL)	Ta = 25℃, If = 200mA	1,000 Hours	20 pcs	0/1
2	Wet High Temperature Operating Life (WHTOL)	Ta = 60℃, RH = 90% If = 200mA	1,000 Hours	20 pcs	0/1
3	High Temperature Operating Life (HTOL)	Ta = 85℃, If = 200mA	1,000 Hours	20 pcs	0/1
4	Low Temperature Operating Life (LTOL)	Ta = -40℃, If = 200mA	1,000 Hours	20 pcs	0/1
5	High Temperature Storage Life (HTSL)	Ta = 100℃	1,000 Hours	20 pcs	0/1
6	Low Temperature Storage Life (LTSL)	Ta = -40℃	1,000 Hours	20 pcs	0/1
7	Wet High Temperature Storage Life (WHTSL)	Ta = 85℃, RH = 85%	1,000 Hours	20 pcs	0/1
8	Temperature Cycle (TC)	-40℃(30min) ~ 100℃(30min)	100 Cycles	20 pcs	0/1
9	Moisture Sensitivity Level (MSL)	Tsld = 260℃ (Pre treatment 60℃,60% 168 hours)	3 Times	20 pcs	0/1
10	Vibration	100~2000~100Hz Sweep 4min. 200m/s², 3 directions	48 Minutes	20 pcs	0/1

※ All samples are tested using LG Innotek Standard Metal PCB (25x25x1.6 mm^3(L×W×H)) except MSL test .
※ All samples must pass each test item and all test items must be satisfied.

10. Packing and Labeling of Products

10-1. Taping Outline Dimension

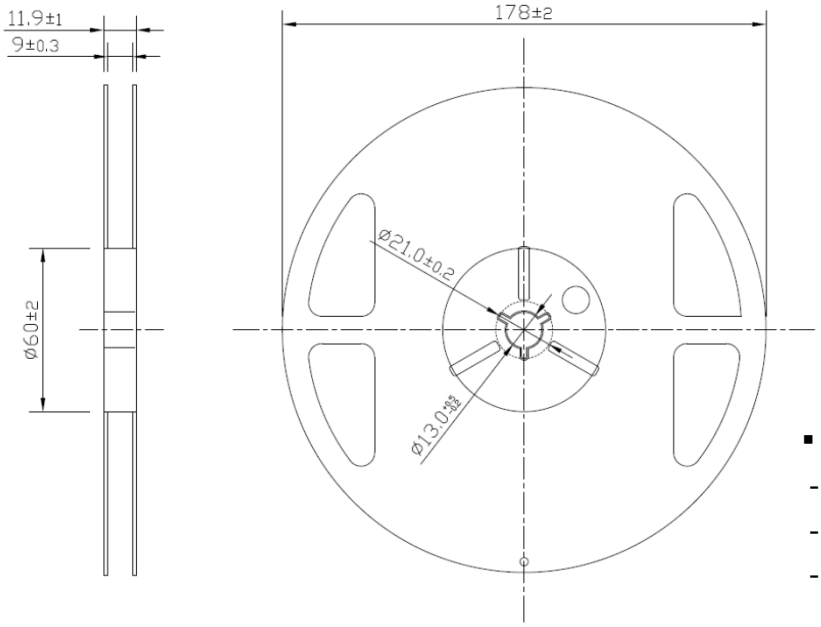

(Unit : mm)

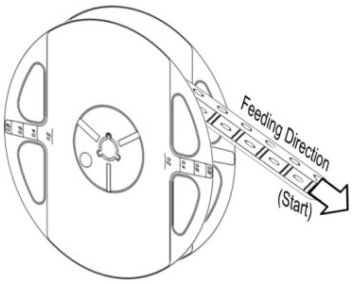

- Packing Materials :
  - Reel : Conductive PS (Black)
  - Embossed Carrier Tape : Antistatic PET (Clear)
  - Cover Tape : Conductive PET Base

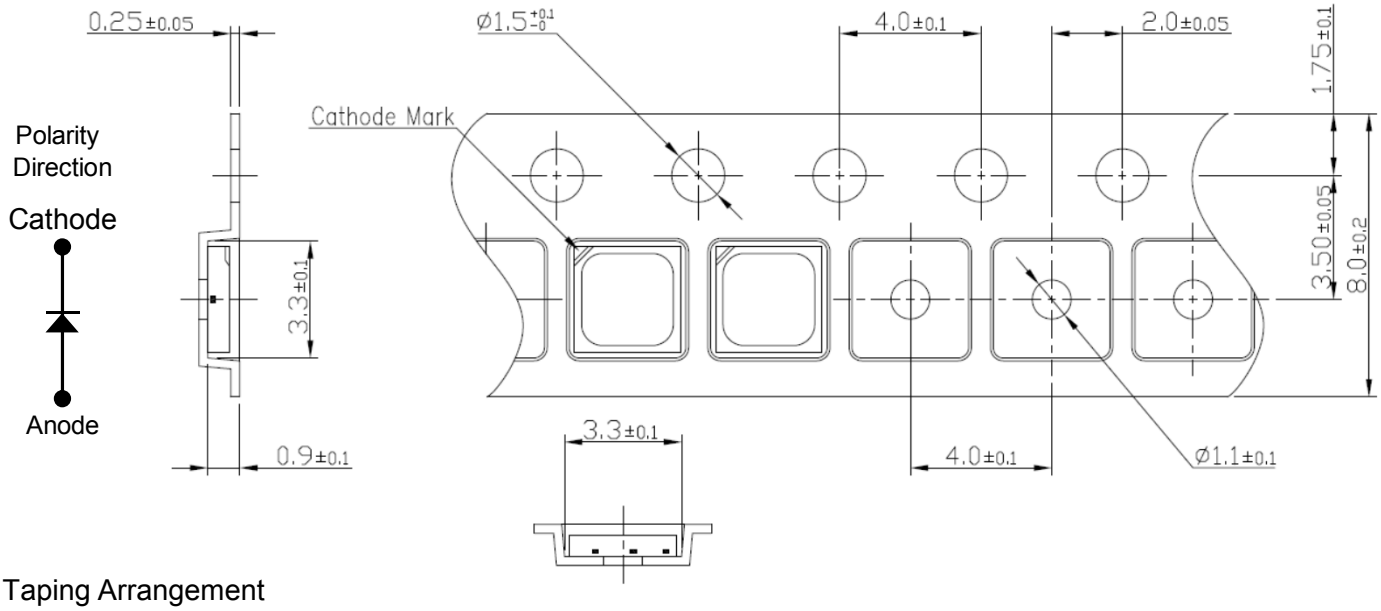

Taping Arrangement

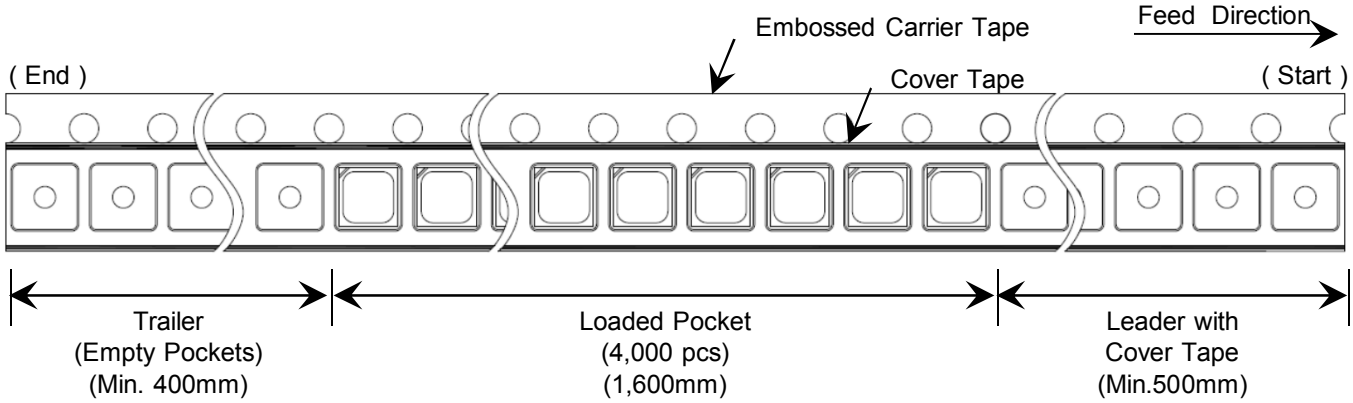

10. Packing and Labeling of Products

10-2. Packing Structures

Reeled products are packed in a sealed-off and moisture-proof aluminum bag with desiccants (silica gel) and HIC (Humidity Indicator Card). A maximum of four aluminum bags are packed in an inner box and six inner boxes are packed in an outer box.

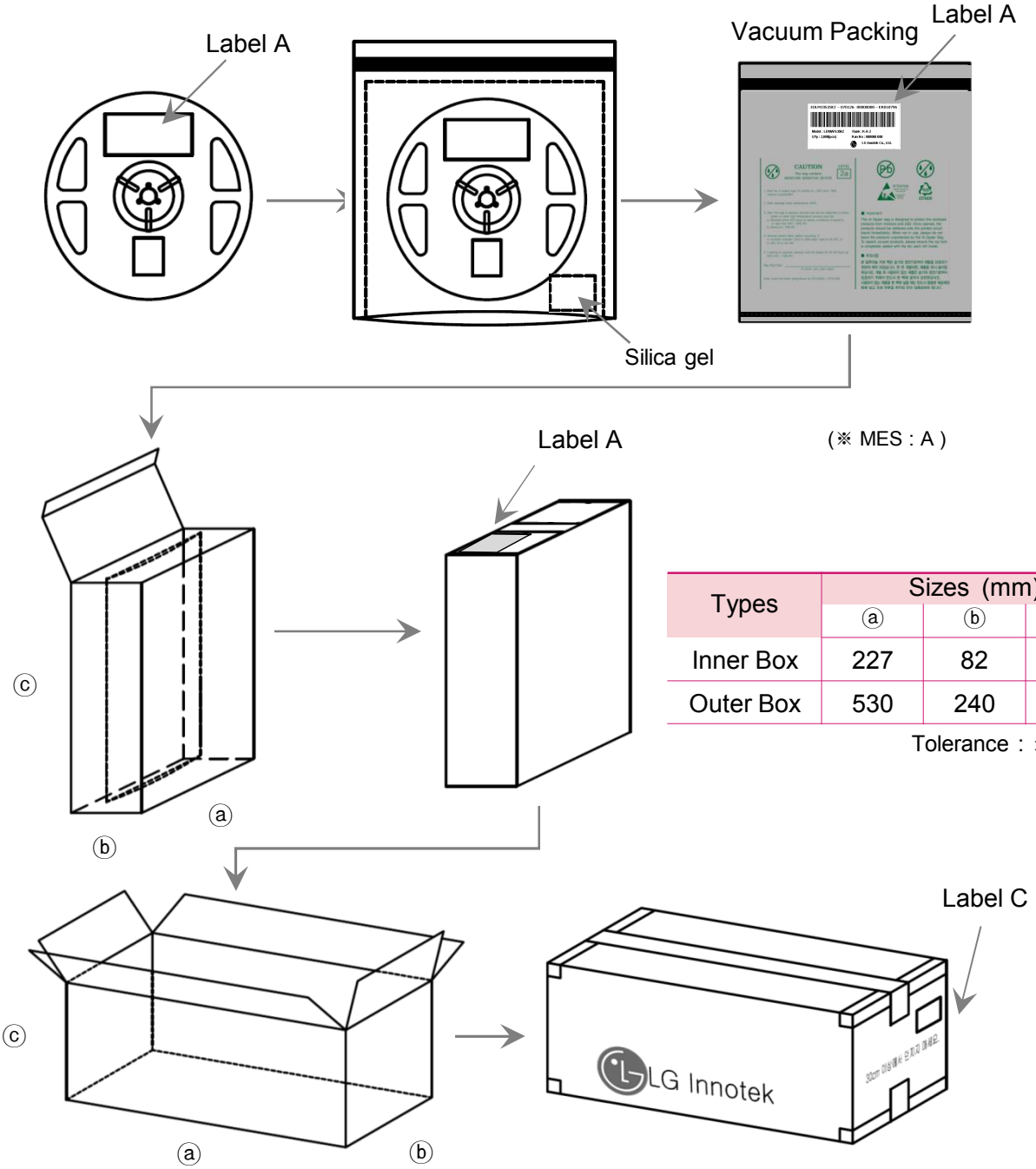

Types	Sizes (mm)		
	ⓐ	ⓑ	ⓒ
Inner Box	227	82	258
Outer Box	530	240	280

Tolerance : ±10 mm

10. Packing and Labeling of Product

10-3. MES Label Structure

※. Label A

Specifying Model Name, Rank, Rack, Quantity and Run number

<Example>

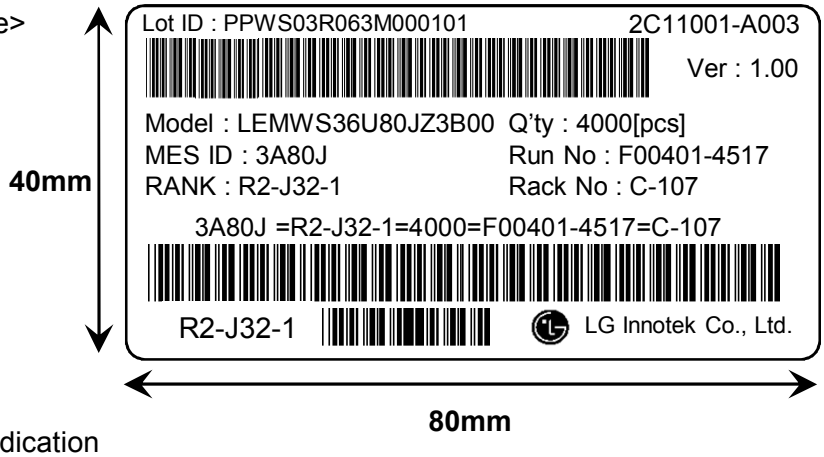

▪ Run No. indication

1	2	3	4	5	6	—	7	8	9	10
Code	Manufacture Site	Manufacture Year	Manufacture Month	Manufacture date			TP #		Serial No	
	Paju : 1 Huizhou : 9	2017 : 7 … 2020 : 0 2021 : 1	1~9 : 1~9 10 : A 11 : B 12 : C	(01~31)			(00 ~ 99)		(00 ~ ZZ)	

※. Label C

Specifying Customer, Date, Model Name, Quantity, Customer Part no, Outbox ID, Rank/Rank Q'ty

<Example>

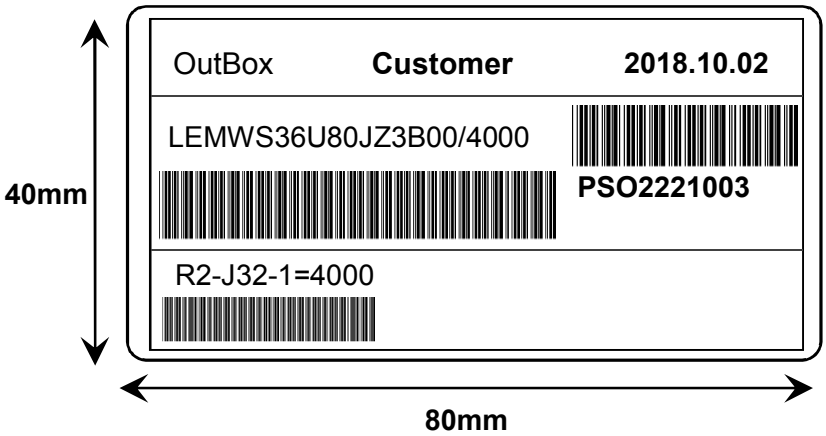

▪ Box ID. indication

1	2	3	4	5	6	7	8	9	10
Manufacture Site	PKG Site	Box	Year	Month	Date		Serial No		
Paju : P Huizhou : H	PKG : S, P	Inner Box : I Outer Box : O	2017 : 7 … 2020 : 0 2021 : 1	1~9 : 1~9 10 : A 11 : B 12 : C	(01 ~ 31)		(001 ~ 999)		

11. Cautions on Use

11-1. Moisture-Proof Package

-. The moisture in the SMD package may vaporize and expand during soldering.

-. The moisture can damage the optical characteristics of the LEDs due to the encapsulation.

11-2. During Storage

Conditions		Temperature	Humidity	Time
Storage	Before Opening Aluminum Bag	5℃ ~ 30℃	< 50%RH	Within 1 Year from the Delivery Date
	After Opening Aluminum Bag	5℃ ~ 30℃	< 60%RH	≤ 672 hours
Baking		65 ± 5℃	< 10%RH	10 ~ 24 hours

11-3. During Usage

-. The LED should avoid direct contact with hazardous materials such as sulfur, chlorine, phthalate, etc.

-. The metal parts on the LED can rust when exposed to corrosive gases. Therefore, exposure to corrosive gases must be avoided during operation and storage.

-. The silver-plated metal parts also can be affected not only by the corrosive gases emitted inside of the end-products but by the gases penetrated from outside environment.

-. Extreme environments such as sudden ambient temperature changes or high humidity that can cause condensation must be avoided.

11-4. Cleaning

-. Do not use brushes for cleaning or organic solvents (i.e. Acetone, TCE, etc..) for washing as they may damage the resin of the LEDs.

-. Isopropyl Alcohol(IPA) is the recommended solvent for cleaning the LEDs under the following conditions. (Cleaning Condition : IPA, 25℃ max. × 60sec max.)

-. Ultrasonic cleaning is not recommended.

-. Pretests should be conducted with the actual cleaning process to validate that the process will not damage the LEDs.

11-5. Thermal Management

-. The thermal design of the end product must be seriously considered, particularly at the beginning of the system design process.

-. The generation of heat is greatly impacted by the input power, the thermal resistance of the circuit boards and the density of the LED array combined with other components.

11. Cautions on Use

11-6. Testing & Measurement (Compliance)

-. When the individual LED is tested, LG Innotek recommends that the compliance of the source meter should be controlled like as; the input voltage should be set below 75V and the current also should be set below 30mA.
Otherwise, the LED chip might be affected by certain surge or electrical overstress in a moment. And that means it can lead to serious failure for that LED.

11-7. Static Electricity

-. Wristbands and anti-electrostatic gloves are strongly recommended and all devices, equipment and machinery must be properly grounded when handling the LEDs, which are sensitive against static electricity and surge.
-. Precautions are to be taken against surge voltage to the equipment that mounts the LEDs.
-. Unusual characteristics such as significant increase of current leakage, decrease of turn-on voltage, or non-operation at a low current can occur when the LED is damaged.

11-8. Recommended Circuit

-. The current through each LED must not exceed the absolute maximum rating when designing the circuits.
-. In general, there can be various forward voltages for LEDs. Different forward voltages in parallel via a single resistor can result in different forward currents to each LED, which also can output different luminous flux values. In the worst case, the currents can exceed the absolute maximum ratings which can stress the LEDs. Matrix circuit with a single resistor for each LED is recommended to avoid the luminous flux fluctuations.

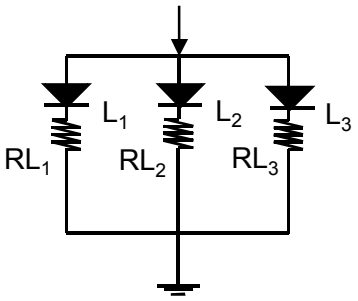

Fig.1 Recommended Circuit in Parallel Mode
: Separate resistors must be used for each LED.

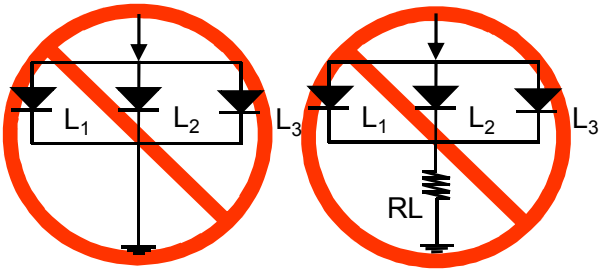

Fig.2 Abnormal Circuit
Circuits to Avoid : The current through the LEDs may vary due to the variation in LED forward voltage.

-. The driving circuits must be designed to operate the LEDs by forward bias only.
-. Reverse voltages can damage the zener diode, which can cause the LED to fail.
-. A constant current LED driver is recommended to power the LEDs.

11. Cautions on Use

11-9. Soldering Conditions

-. Reflow soldering is the recommended method for assembling LEDs on a circuit board.

-. LG Innotek does not guarantee the performance of the LEDs assembled by the dip soldering method.

-. Recommended Soldering Profile (according to JEDEC J-STD-020D)

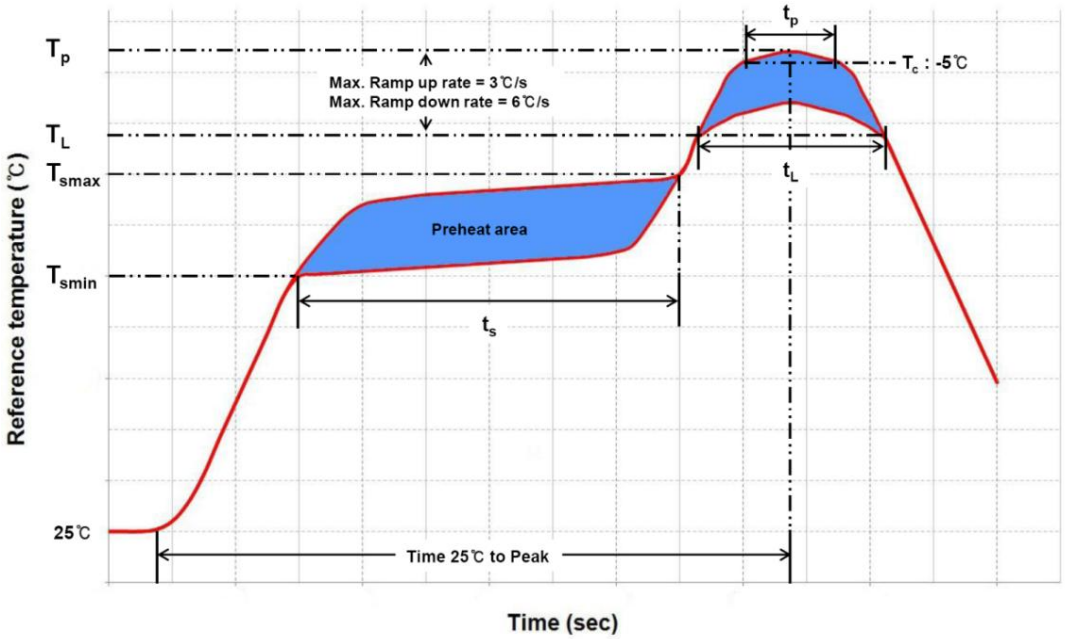

Profile Feature	Pb-Free Assembly	Pb-Based Assembly
Preheat / Soak Temperature Min (T_{smin}) Temperature Max (T_{smax}) Maximum time(t_s) from T_{smin} to T_{smax}	 150℃ 200℃ 60~120 seconds	 100℃ 150℃ 60~120 seconds
Ramp-up rate (T_L to T_p)	3℃/ second max.	3℃/ second max.
Liquidous temperature (T_L)	217℃	183℃
Time (t_L) maintained above T_L	60~150 seconds	60~150 seconds
Maximum peak package body temperature (T_p)	260℃	235℃
Time(t_p) within 5℃ of the specified temperature (T_c)	30 seconds	20 seconds
Ramp-down rate (T_p to T_L)	6℃/second max.	6℃/second max.
Maximum Time 25℃ to peak temperature	8 minutes max.	6 minutes max.

-. Reflow or hand soldering at the lowest possible temperature is desirable for the LEDs although the recommended soldering conditions are specified in the above diagrams.

-. A rapid cooling process is not recommended for the LEDs from the peak temperature.

-. The silicone encapsulant at the top of the LED package is a soft surface, which can easily be damaged by pressure. Precautions should be taken to avoid strong pressure on the silicone resin when leveraging the pick and place machines.

-. Reflow soldering should not be done more than two times.

11. Cautions on Use

11-10. Soldering Iron

-. The recommended condition is less than 5 seconds at 260℃.
-. The time must be shorter for higher temperatures. (+10℃ → -1sec).
-. The power dissipation of the soldering iron should be lower than 15W and the surface temperature of the device should be controlled at or under 230℃.

11-11. Eye Safety Guidelines

-. Do not directly look at the light when the LEDs are on.
-. Proceed with caution to avoid the risk of damage to the eyes when examining the LEDs with optical instruments.

11-12. Manual Handling

-. Use Teflon-type tweezers to grab the base of the LED and do not apply mechanical pressure on the surface of the encapsulant.

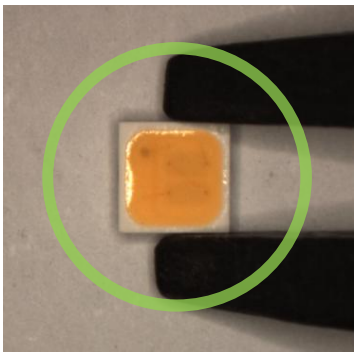

12. Disclaimers

-. LG Innotek is not responsible for any damages or accidents caused if the operating or storage conditions exceed the absolute maximum ratings recommended in this document.
-. The LEDs described in this document are intended to be operated by ordinary electronic equipment.
-. It is recommended to consult with LG Innotek when the environment or the LED operation is non-standard in order to avoid any possible malfunctions or damage to product or risk of life or health.
-. Disassembly of the LED products for the purpose of reverse engineering is prohibited without prior written consent from LG Innotek. All defected LEDs must be reported to LG Innotek and are not to be disassembled or analyzed.
-. The product information can be modified and upgraded without prior notice.

Appendix. Nomenclature of Package

All LEDs are tested and sorted by color, luminous flux and forward voltage where every LED in a tube has only a single color bin, luminous flux bin and forward voltage bin. However, the forward voltage bin information is not captured in the part number nomenclature.
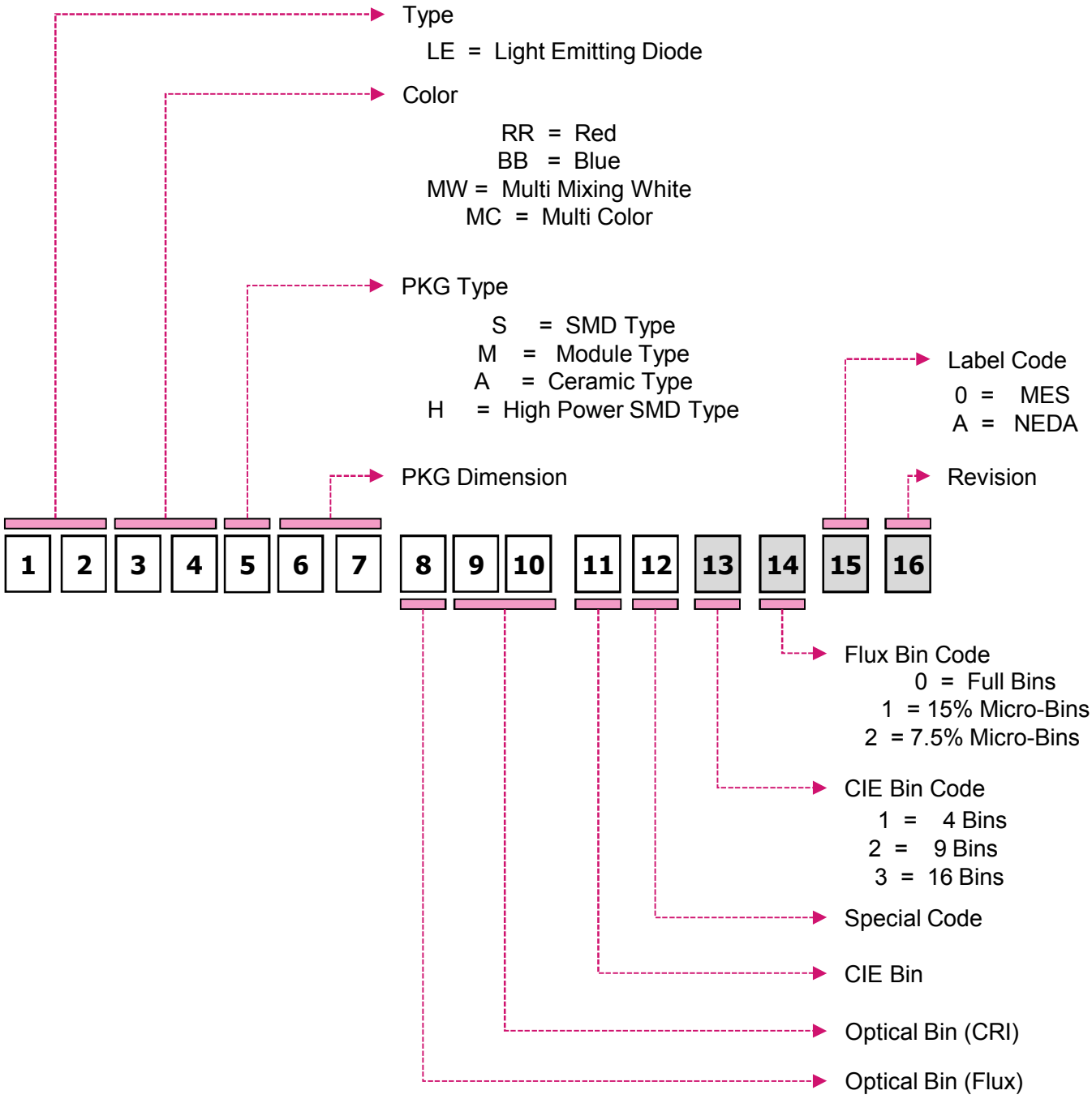
A 16-digit part number is required when orders are placed. LG Innotek leverages the following part number nomenclature.